3.0V to 5.5V, RS-232 Transceivers

Features

- Meets EIA/TIA-232-F standards
- Operates With 3-V to 5.5-V VCC Supply
- Operates up to 250 kbit/s
- Two Drivers and Two Receivers
- Low Supply Current
- External Capacitors: 4x0.1 μF
- Accepts 5-V Logic Input With 3.3-V Supply
- 1μA low power shutdown with receivers active (COSMAX3222)
- Packaging:
  COSMAX3232: SOP16/TSSOP16
  COSMAX3222: SOP20/TSSOP20

Applications

- Battery-Powered Systems
- Hand-Held Equipment
- Laptops
- Notebooks

Rev1.2
Copyright@2018 Cosine Nanoelectronics Inc. All rights reserved
The information provided here is believed to be accurate and reliable. Cosine Nanoelectronics assumes no reliability for inaccuracies and omissions. Specifications described and contained here are subjected to change without notice on the purpose of improving the design and performance. All of this information described herein should not be implied or granted for any third party.

General Description

The COSMAX3232 and COSMAX3222 family consists of two-line drivers, two-line receivers, and a dual charge-pump circuit. The device meets the requirements of TIA/EIA-232-F and provides the electrical interface between an asynchronous communication controller and the serial-port connector. The charge pump and four small external capacitors allow operation from a single 3-V to 5.5-V supply. The devices operate at data signaling rates up to 250 kbit/s and a maximum of 30-V/μs driver output slew rate.

The COSMAX3222 device has a low-power shutdown mode where the devices' driver outputs and charge pumps are disabled. During shutdown, the supply current falls to less than 1μA. When the device is powered down, the receivers remain active while the drivers are placed in the high-impedance state. Receiver outputs also can be placed in the high impedance state by setting $\overline{\mathrm{EN}}$ high.

1. Pin Configuration and Functions

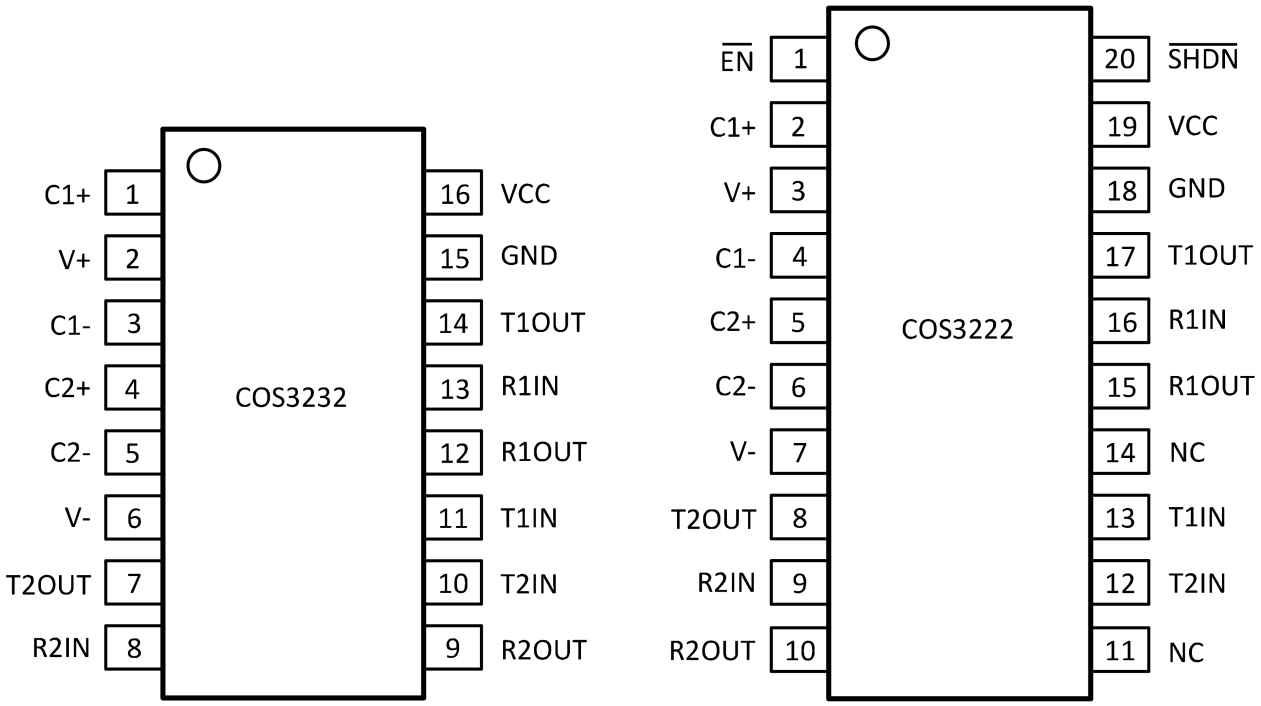

Figure 1 Pin Diagram

Pin Description

Pin Name	Description	Pin Number	
		COSMAX3232	COSMAX3222
$\overline{EN}$	Receiver Enable. Apply logic LOW for normal operation. Apply logic HIGH to disable the receiver outputs (high-Z state).	-	1
C1 +	Positive terminal of the voltage doubler charge-pump capacitor	1	2
V+	5.5V output generated by the charge pump	2	3
C1-	Negative terminal of the voltage doubler charge-pump capacitor	3	4
C2+	Positive terminal of the inverting charge-pump capacitor	4	5
C2-	Negative terminal of the inverting charge-pump capacitor	5	6

V-	-5.5V output generated by the charge pump	6	7
TOUT1	RS-232 driver output	14	17
TOUT2	RS-232 driver output	7	8
RIN1	RS-232 driver input	13	16
RIN2	RS-232 driver input	8	9
ROUT1	TTL/CMOS receiver output	12	15
ROUT2	TTL/CMOS receiver output	9	10
TIN1	TTL/CMOS driver input, must be volid high or low	11	13
TIN2	TTL/CMOS driver input, must be volid high or low	10	12
GND	Ground	15	18
VCC	3.0V to 5.5V supply voltage	16	19
$\overline{\text{SHDN}}$	Shutdown Control Input. Drive HIGH for normal device operation. Drive LOW to shutdown the drivers (high-Z output) and the on-board power supply.	-	20

2. Product Specification

2.1 Absolute Maximum Ratings (1)

Parameter	Min	Max	Unit
DC supply voltage, Vcc	-0.3	6	V
Positive output supply voltage, V+	-0.3	8	V
Negative output supply voltage, V+	-0.3	-8	V
Supply voltage difference, V+ - V-		16	V
Driver input voltage, V_{TI}	-0.3	6	V
Receiver input voltage, V_{RI}	-16	+16	V
Driver output voltage, V_{TO}	-16	+16	V
Receiver output voltage, V_{RO}	-0.3	Vcc +0.3	V
Operating junction temperature		+150	°C
Storage temperature	-65	+150	°C

(1) Stresses exceeding the absolute maximum ratings may damage the device. The device may not function or be operable above the recommended operating conditions and stressing the parts to these levels is not recommended. In addition, extended exposure to stresses above the recommended operating conditions may affect device reliability. The absolute maximum ratings are stress ratings only.

2.2 Thermal Data

Parameter	Rating	Unit
Package Thermal Resistance，R_{JA}	80 (SOP16) 90 (TSSOP20)	°C/W

2.3 Recommended Operating Conditions

Parameter	Min.	Typ.	Max.	Unit
DC Supply voltage, Vcc	3.0	3.3	5.5	V
Driver high-level input voltage	2		5.5	V
Driver low-level input voltage	0		0.8	V
Receiver input voltage	-15		+15	V
Data rate	0		250	Kbps
Operating ambient temperature	-40		+85	°C
Operating junction temperature	-40		+125	°C

2.4 Electrical Characteristics

(Typical values are tested at T_A=25 °C, V_{CC}=3.3V)

Parameter	Symbol	Conditions	Min.	Typ.	Max.	Unit
DC Characteristics						
Supply current	I_{CC}	no load, Vcc = 3.3V, TxIN = GND or Vcc		0.4	1.0	mA
Shutdown supply current	I_{SD}	$\overline{SHDN}$= GND, Vcc = 3.3V, TxIN = GND or Vcc		1.0	10	μA
Driver Characteristics						
High-level output voltage	V_{OH}	DIN=GND R_L=3kΩ to GND	+5.0	+5.4		V
Low-level output voltage	V_{OL}	DIN=Vcc R_L=3kΩ to GND	-5.0	-5.4		V

Output resistance	R_O	V_{CC}, V+, and V– = 0 V, V_{OUT} = ±2 V	300			Ω
Output short-circuit current	I_{OS}	V_{OUT}=0		±35	±60	mA
Output leakage current	I_{OK}	V_{OUT}=±12V, drivers disabled Vcc=0V or 3.0V to 5.5V			±25	μA
Receiver Characteristics						
Input voltage range	V_{IN}		-15		+15	V
Input threshold LOW	V_{ITL}	Vcc = 3.3V	0.6	1.2		V
		Vcc = 5.0V	0.8	1.5		V
Input threshold HIGH	V_{ITH}	Vcc = 3.3V		1.5	2.4	V
		Vcc = 5.0V		1.8	2.4	V
Input hysteresis	V_{HYS}			0.3		V
Input resistance	R_i	V_{IN} = ±3 V to ±15 V	3	5	7	kΩ
Logic Inputs and Receiver Outputs						
Input logic threshold LOW		$\overline{SHDN}$, $\overline{EN}$, TxIN			0.8	V
Input logic threshold HIGH		Vcc=3.3V	2.0		Vcc	V
Input logic threshold HIGH		Vcc=5.0V	2.4		Vcc	V
Input leakage current		$\overline{SHDN}$, $\overline{EN}$, TxIN		0.01	1	μA
Output leakage current		Receivers disabled, Vout=0V to Vcc		0.05	10	μA
Logic Input low voltage		I_{OUT}=1.6mA			0.4	V
Logic Input current		I_{OUT}=-1.0mA	Vcc-0.6			V

Switching Characteristics						
Maximum data rate	t_{PZH}	R_L = 3kΩ, C_L = 1000pF, one driver switching	150	250		kbps
Driver propagation delay	t_{PHL}	R_L = 3kΩ, C_L = 1000pF		1.0		μs
	t_{PLH}	R_L = 3kΩ, C_L = 1000pF		1.0		μs
Receiver propagation delay	t_{PHL}	Receiver input to receiver output, C_L = 150pF		0.3		μs
	t_{PLH}	Receiver input to receiver output, C_L = 150pF		0.3		μs
Receiver output enable time				200		ns
Receiver output disable time				200		ns
Driver skew		$\lvert t_{PHL} - t_{PLH} \rvert$		100	500	ns
Receiver skew		$\lvert t_{PHL} - t_{PLH} \rvert$		200	1000	ns
Slew Rate	SR	R_L = 3kΩ to 7kΩ, C_L = 150pF to 1000pF	6		30	V/μs

3. Application Information

3.1 Overview

The COSMAX3232 (Figure 2) and COSMAX3222 (Figure 3) are 2-driver / 2-receiver devices ideal for portable or hand-held applications. The COSMAX3222 features a 1μA shutdown mode that reduces power consumption and extends battery life in portable systems. Its receivers remain active in shutdown mode, allowing external devices such as modems to be monitored using only 1μA supply current. The charge pump and four small external capacitors allow operation from a single 3-V to 5.5-V supply. The device operates at data signaling rates up to 250 kbit/s and a maximum of 30-V/μs driver output slew rate. Outputs are protected against shorts to ground. Table 1 and Table 2 list the functional modes of the COSMAX3232 drivers and receivers.

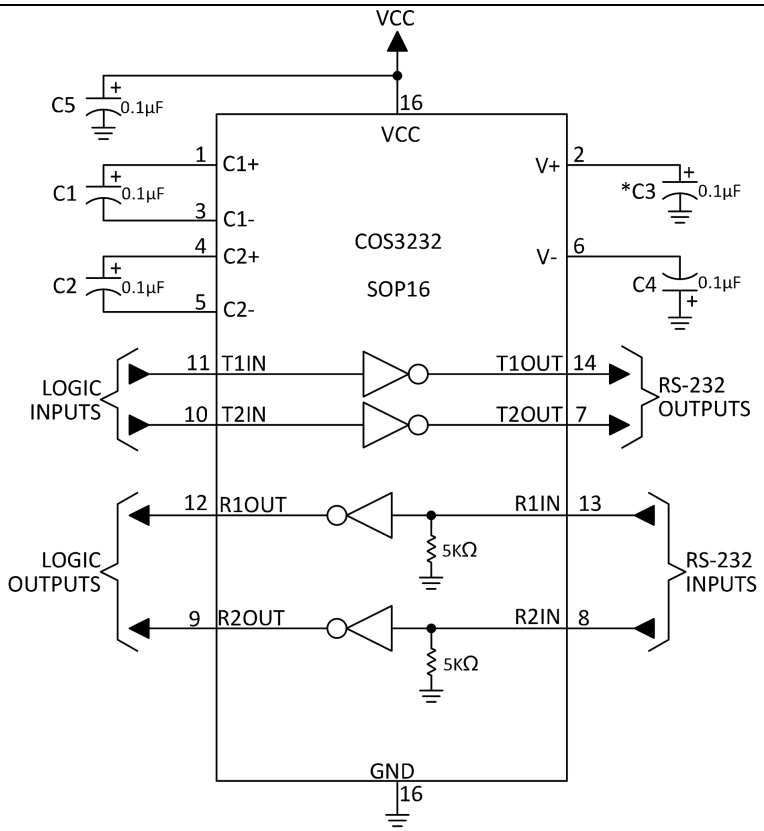

Figure 2 COSMAX3232 Typical Operation Circuit

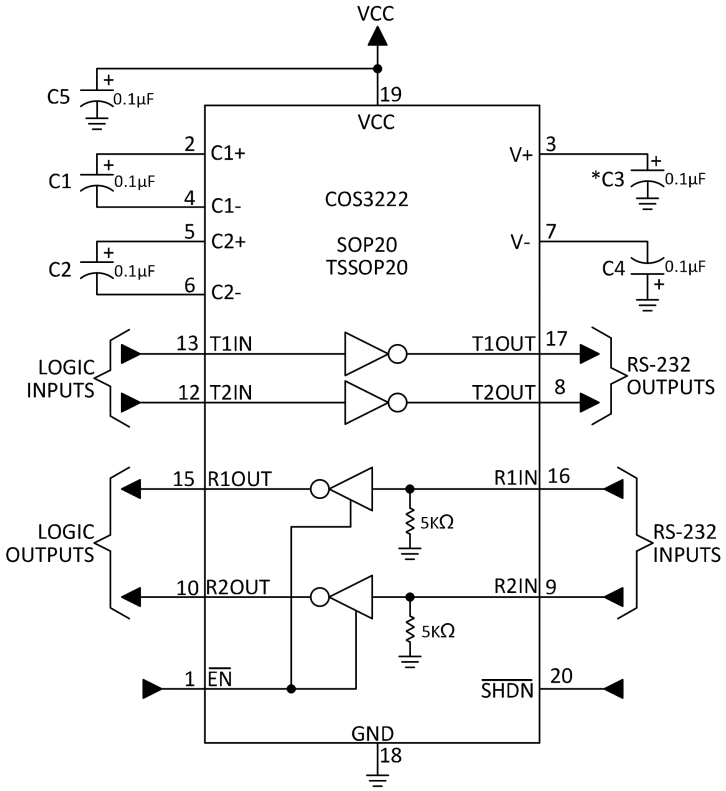

Figure 3 COSMAX3222 Typical Operation Circuit

Table 1. COSMAX3232 Driver Function Modes

INPUT TIN	OUTPUT TOUT
L	H
H	L

Table 2. COSMAX3232 Receiver Function Modes

INPUT RIN	OUTPUT ROUT
L	H
H	L
Open	H

3.2 Drivers

The COSMAX3232/COSMAX3222 drivers are inverting level transmitters that convert TTL or CMOS logic levels to 5.0V EIA/TIA-232 levels with an inverted sense relative to the input logic levels. Typically, the RS-232 output voltage swing is 5.4V with no load and 5V minimum fully loaded. The driver outputs are protected against infinite short-circuits to ground without degradation in reliability. Driver outputs will meet EIA/TIA-562 levels of ±3.7V with supply voltages as low as 2.7V. The drivers can guarantee a data rate of 120kbps fully loaded with 3kΩ in parallel with 1000pF, ensuring compatability with PC-to-PC communication software. The slew rate of the driver is internally limited to a maximum of 30V/μs in order to meet the EIA standards (EIA RS-232D 2.1.7, Paragraph 5). The transition of the loaded output from HIGH to LOW also meet the monotonicity requirements of the standard.

When the COSMAX3222 device is shut down ($\overline{\text{SHDN}}$= LOW), the device's driver outputs are disabled (tri-stated) and the charge pumps are turned off with V+ pulled down to VCC and V- pulled to GND. In the shutdown mode, the supply current falls to less than 1μA. The time required to exit shutdown is typically 100μs. Connect $\overline{\text{SHDN}}$ to VCC if the shutdown mode is not used. The driver's inputs do not have pullup resistors. Designers should connect unused inputs to VCC or GND.

3.3 Receivers

The Receivers convert EIA/TIA-232 levels to TTL or CMOS logic output levels. The COSMAX3222 receivers have an inverting tri-state output. These receiver outputs (RxOUT) are tri-stated when the enable control $\overline{EN}$ = HIGH. In the shutdown mode, the receivers can be active or inactive. $\overline{EN}$ has no effect on TxOUT. The truth table logic of the COSMAX3222 driver and receiver outputs can be found in Table 3.

Table 3 COSMAX3222 Truth Table Logic for Shutdown and Enable Control

$\overline{SHDN}$	$\overline{EN}$	TOUT1,2	ROUT1,2
0	0	Tri-state	Active
0	1	Tri-state	Tri-state
1	0	Active	Active
1	1	Active	Tri-state

Since receiver input is usually from a transmission line where long cable lengths and system interference can degrade the signal, the inputs have a typical hysteresis margin of 300mV. This ensures that the receiver is virtually immune to noisy transmission lines. Should an input be left unconnected, an internal 5kΩ pulldown resistor to ground will commit the output of the receiver to a HIGH state.

3.4 Charge Pump

The internal charge pump and four small external capacitors allow operation from a single 3-V to 5.5-V supply. Select capacitor values (Table 4) based on Vcc level for best performance.

Table 4. VCC vs Capacitor Values

VCC	C1	C2, C3, C4
3.3 V ± 0.5 V	0.1 μF	0.1 μF
5 V ± 0.5 V	0.047 μF	0.33 μF
3.0 V to 5.5 V	0.1 μF	0.47 μF

4. Package Information

4.1 SOP16 (Package Outline Dimensions)

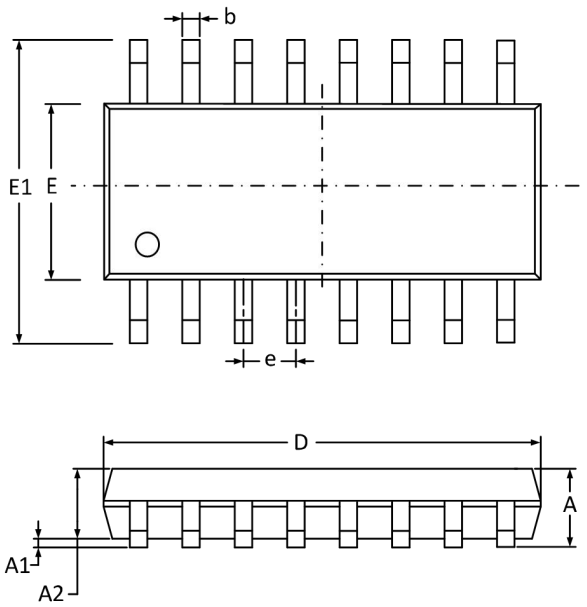

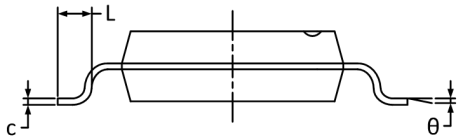

Symbol	Dimensions In Millimeters		Dimensions In Inches	
	MIN	MAX	MIN	MAX
A	1.350	1.750	0.053	0.069
A1	0.100	0.250	0.004	0.010
A2	1.350	1.550	0.053	0.061
b	0.330	0.510	0.013	0.020
c	0.170	0.250	0.006	0.010
D	9.800	10.20	0.386	0.402
E	3.800	4.000	0.150	0.157
E1	5.800	6.200	0.228	0.244
e	1.27 BSC		0.050 BSC	
L	0.400	1.270	0.016	0.050
θ	0°	8°	0°	8°

4.2 TSSOP20 (Package Outline Dimensions)

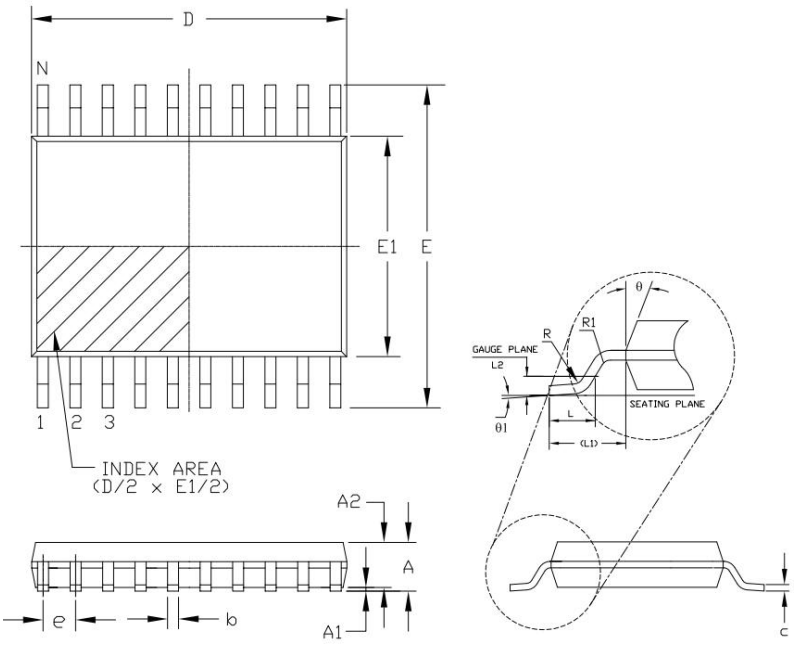

SYMBOLS	DIMENSIONS IN MM (Control Unit)			DIMENSIONS IN INCH (Reference Unit)		
	MIN	NOM	MAX	MIN	NOM	MAX
A	—	—	1.20	—	—	0.047
A1	0.05	—	0.15	0.002	—	0.006
A2	0.80	1.00	1.05	0.031	0.039	0.041
b	0.19	—	0.30	0.007	—	0.012
c	0.09	—	0.20	0.004	—	0.008
E	6.40 BSC			0.252 BSC		
E1	4.30	4.40	4.50	0.169	0.173	0.177
e	0.65 BSC			0.026 BSC		
L	0.45	0.60	0.75	0.018	0.024	0.030
L1	1.00 REF			0.039 REF		
L2	0.25 BSC			0.010 BSC		
R	0.09	—	—	0.035	—	—
R1	0.09	—	—	0.035	—	—
θ	12° REF			12° REF		
θ1	0°	—	8°	0°	—	8°
D	6.40	6.50	6.60	0.252	0.256	0.260
N	20			20		

5. Order Information

Model	Order Number	Package	Package Option	Marking Information
COSMAX3232	COSMAX3232IDR	SOP-16	Tape and Reel, 2000	COS3232
	COSMAX3232EIPWR	TSSOP16	Tape and Reel, 4000	COS3232
COSMAX3222	COSMAX3222SR	SOP-20	Tape and Reel, 2000	COS3222
	COSMAX3222TR	TSSOP20	Tape and Reel, 2000	COS3222